AXTAL ADVANCED XTAL PRODUCTS

Specification	AXQCM597-Au	Rev.: 3	Date: 2014-06-02

Type : **Quartz Crystal Microbalance Element (Monitor Crystal)**

Electrodes Maxtek Style

Parameter	min.	typ.	max.	Unit	Condition
Nominal frequency		6.000		MHz	
Adjustment frequency		5.970		MHz	
Crystal cut		AT			
Overtone		1			
Adjustment tolerance	-7		+7	kHz	@ 25°C
Frequency stability					
Over operating temperature range	-50		+50	ppm	
Resonance resistance R_r		15	60	Ω	
Motional capacitance C_1				fF	
Shunt capacitance C_0			7	pF	
Drive level		100		µW	
Operating temperature range	0		+70	°C	
Storage temperature range	-40		+105	°C	
QCM diameter		13.97 ± 0.03		mm	
Blank surface quality		Fine lapped			
Electrode diameter Side A		13.0 ± 0.1		mm	Fully plated
Electrode material Side A		Cr-Au			
Electrode diameter Side B		6.4 ± 0.2		mm	See drawing
Electrode material Side B		Cr-Au			

Side : A (Plane)

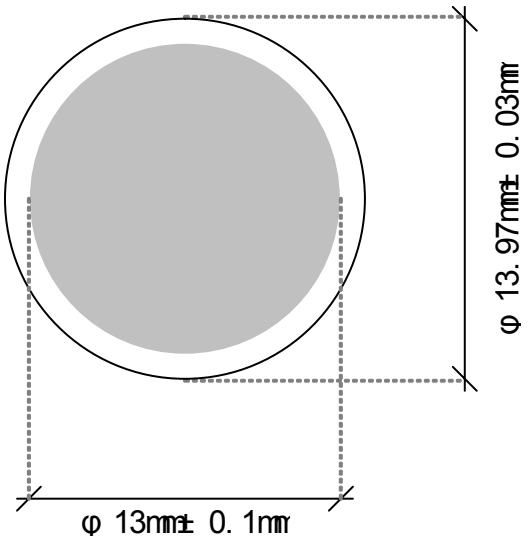

Side: B (Convex)

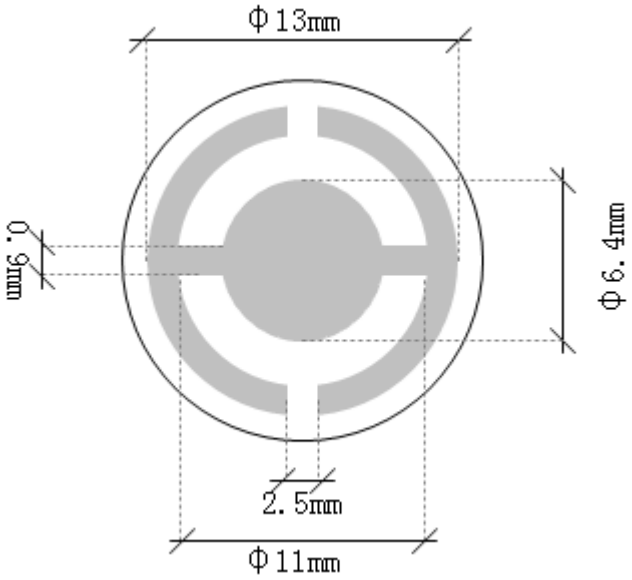

Ordering Code:

Model (Specification)	Frequency [MHz]
AXQCM597-Au	5.970

Revision History

Rev.	Drawing	Date [dd.mm.yyyy]	Remarks	Author	Checked
2	D0	23.10.2013		EP	BN
3	D1	02.06.2014	Editorial changes	BN	BN