AXTAL ADVANCED XTAL PRODUCTS

Specification	AXLCM610-Au	Rev: 2	Date: 2014-06-02

Type : **Langasite Crystal Microbalance Element (Monitor Crystal)**

QCM for High Temperature Applications up to 500°C

Parameter	min.	typ.	max.	Unit	Condition
Nominal frequency		6.000		MHz	
Adjustment frequency		6.000		MHz	
Crystal cut		Y ± 0.1'			
Overtone		1			
Adjustment tolerance	-15		+15	kHz	@ 25°C
Frequency stability					
Over operating temperature range				ppm	See charts page 2
Resonance resistance R_r		10	50	Ω	
Motional capacitance C_1				fF	
Shunt capacitance C_0			7	pF	
Drive level		100		µW	
Operating temperature range	0		+500	°C	
Storage temperature range	-40		+550	°C	
QCM diameter		13.97±0.03		mm	
Contour		Plano-convex			
Blank surface quality		Fine lapped			
Electrode diameter Side A		13.0 ± 0.1		mm	Fully plated
Electrode material Side A		Cr-Au			
Electrode diameter Side B		6.4		mm	See drawing
Electrode material Side B		Cr-Au			

Side A (plane)

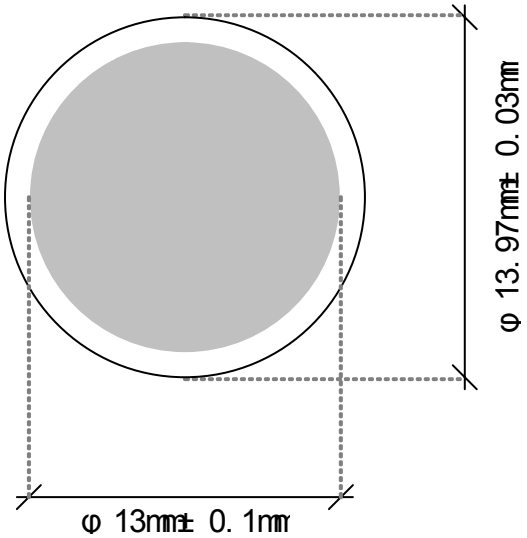

Side B (convex)

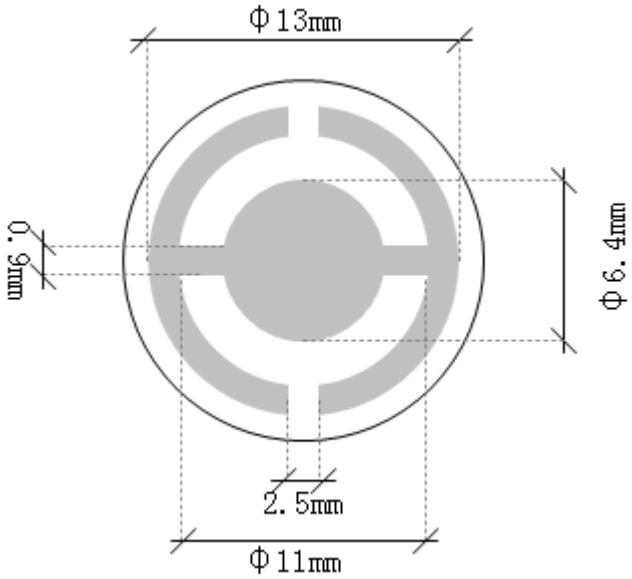

Ordering Code:

Model (Specification)	Frequency [MHz]
AXLCM610-Au	6.000

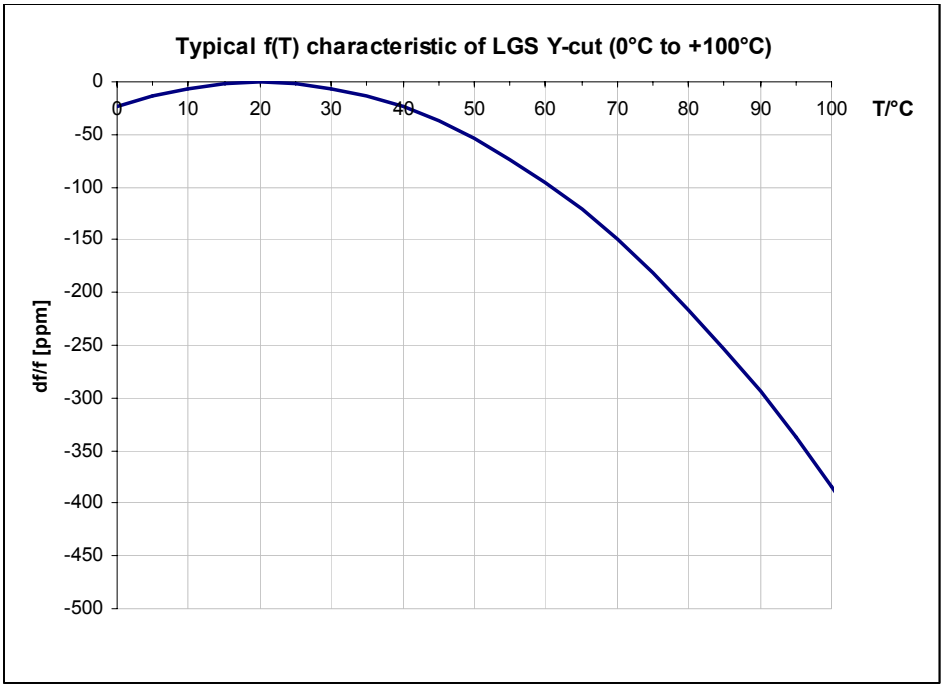

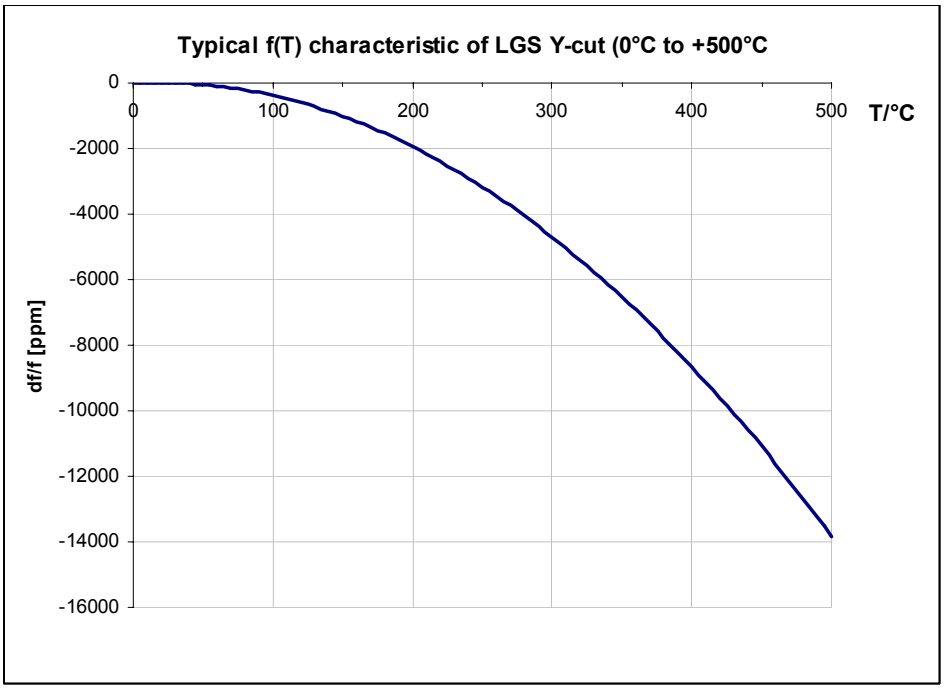

Revision History

Rev.	Drawing	Date [dd.mm.yyyy]	Remarks	Author	Checked
1.		04.07.2013		BN	BN
2	D1	02.06.2014	Operating temperature extended. Editorial changes	BN	BN