AXTAL ADVANCED XTAL PRODUCTS

| Specification | AXE10P(E) | Issue: 04 | Date: 2009-10-19 |
|---|---|---|---|

## Oscillator type : PXO (Clock) with PECL Output

| Parameter | min. | typ. | max. | Unit | Condition |
|---|---|---|---|---|---|
| **Frequency range** | 1.000 | | 800 | MHz | |
| **Frequency stability** (see Note 1) | | | ±25<br>±50 | ppm<br>ppm | Option II = "070"<br>Option II = "485" |
| Initial tolerance | | | | ppm | Included in "frequency stability" |
| vs. temperature in operating temperature range (steady state) | | | | ppm | |
| vs. supply voltage variation | | | ±3 | ppm | $V_S$ ±5% |
| vs. load change | | | ±1 | ppm | Load ±5% |
| long term (aging) per year | | | ±3 | ppm | per year @ +25°C |
| | | | | | |
| **Frequency adjustment range** | | | | | |
| Electronic Frequency Control (EFC) range | | | | ppm | N.A. |
| **RF output** | | | | | |
| Signal waveform | PECL | | | | |
| Load | 50 | | | Ω | To $V_{EE}$ |
| Rise & decay time | | | 1 | ns | 20%~80% of waveform |
| Symmetry (duty cycle) | 45 | | 55 | % | @ 50% of waveform |
| Start-up time | | | 10 | ms | |
| Jitter | | | 1 | ps | r.m.s. 10 kHz ~ 20 MHz |
| **Supply voltage $V_S$** | 3.13<br>4.75 | 3.3<br>5.0 | 3.47<br>5.75 | V<br>V | Option I = "33"<br>Option I = "50" |
| **Current consumption** (steady state @ +25°C) | | | 25 …<br>120 | mA | Note 4 |
| **Enable/disable function (pin 1)** | Not applicable | | | | AXE10P |
| | $V_L$ > 0.8 V: Enable<br>$V_H$>2.0 V or OPEN: Disable | | | | AXE10PE |
| **Operating temperature range** | 0<br>-40 | | +70<br>+85 | °C<br>°C | Option II = "070"<br>Option II = "485" |
| **Operable temperature range** | -45 | | +90 | °C | |
| **Storage temperature range** | -55 | | +105 | °C | |
| **Enclosure (see drawing) (LxWxH)** | 14.8x9.8x5.5 max | | | mm | IEC 61837 CO 27 |
| **Weight** | | | 3 | gram | |
| **Packing** | Tape & reel | | | | IEC 60286-3 |
| **ESD Sensitivity** | 1500 | | | V | HBM as in IEC 61000-4-2 |
| **Construction** | RoHS/ Lead(Pb) -free | | | | EU directive2002/95/EC |
| **Handling and Testing** | In accordance with AXAN-011 | | | | www.axtal.com |
| **Processing** | In accordance with AXAN-012 | | | | www.axtal.com |

**Notes:**

1. Frequency stability = initial tolerance + temp.stability
2. Absolute Pull Range (APR) = EFC range - temperature stability - supply & load change – aging
3. Terminology and test conditions are according to IEC standard IEC60679-1, unless otherwise stated
4. Max. current consumption depends on frequency and on load

## Ordering Code:

| Model (Specification) | Option I | Option II | Frequency [MHz] |
|---|---|---|---|
| AXE10P<br>AXE10PE | 50 | 070 | 155.520 |

## Enclosure drawing

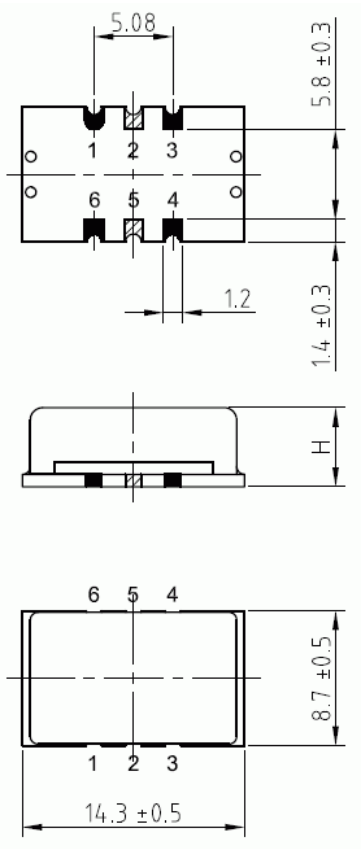


## Pin connections

### AXE10P:

| Pin # | Symbol | Function |
|---|---|---|
| 1 | N.C. | No Connection |
| 2 | N.C. | No Connection |
| 3 | GND | Ground |
| 4 | RF OUT1 | RF Output |
| 5 | RF OUT2 | Complementary RF Out |
| 6 | Vs | Supply Voltage |

### AXE10PE:

| Pin # | Symbol | Function |
|---|---|---|
| 1 | E/D | Enable/Disable |
| 2 | N.C. | No Connection |
| 3 | GND | Ground |
| 4 | RF OUT1 | RF Output |
| 5 | RF OUT2 | Complementary RF Out |
| 6 | Vs | Supply Voltage |

## Environmental conditions

| Test | IEC 60068 Part ... | IEC 60679-1 clause ... | Test conditions |
|---|---|---|---|
| Sealing tests (if applicable) | 2-17 | 4.6.2 | Gross leak: Test Qc,<br>Fine leak: Test Qk |
| Solderability<br>Resistance to soldering heat | 2-20<br>2-58 | 4.6.3 | Test Ta (235 ± 5)°C Method 1<br>Test Tb Method 1A, 5s |
| Shock* | 2-27 | 4.6.8 | Test Ea, 3 x per axes 100g, 6 ms half-sine pulse |
| Vibration, sinusoidal* | 2-6 | 4.6.7 | Test Fc, 30 min per axes,<br>10 Hz - 55 Hz 0,75mm; 55 Hz - 2 kHz, 10g |
| Endurance tests<br>- ageing<br>- extended aging | | <br>4.7.1<br>4.7.2 | <br>30 days @ 85°C, OCXO @25°C<br>1000h, 2000h, 8000h @85°C |